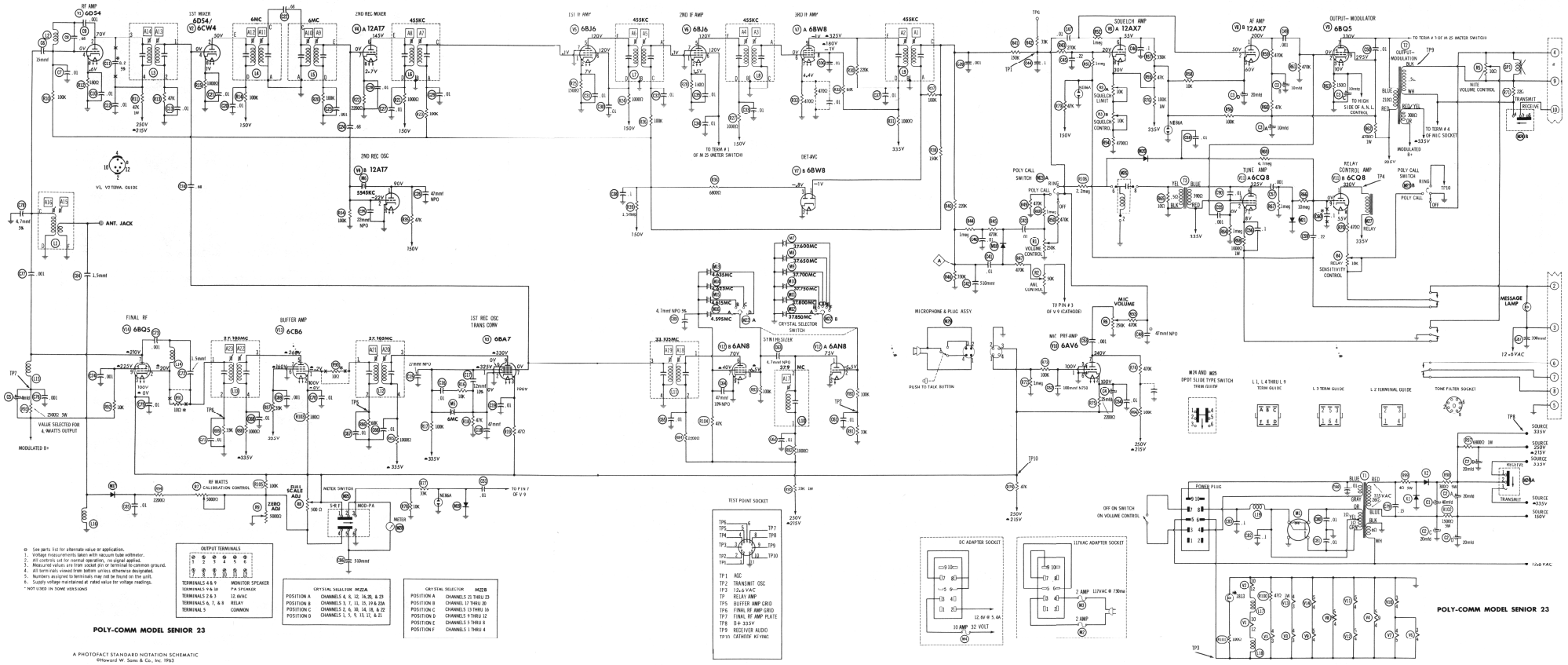

POLY-COMM MODEL SENIOR 23

A PHOTOFACT STANDARD NOTATION SCHEMATIC
©Howard W. Sams & Co., Inc. 1963

POLY-COMM MODEL SENIOR 23